Bedside reading luminaire

Bedside reading luminaire with elegant metal casing BL1-LED recessed/surface mounted 3W black

Description:
bedside reading luminaire, housing metall, terminal for 230V included, colour appearance ww (warm white) approx. 3000K, 350° swiveling 90° tilt; without switch

Connection:	220 - 240V / 50 - 60Hz
Life:	L70/B10 >= 60.000h
Light colour:	3000K warm white
Beam angle:	20°
Energy efficiency:	LED: 120 lm/W; luminaire: 180 lm (60 lm/W)
Energy efficiency class:	G
Colour rendering:	Ra/CRI >= 90
Symbols:	CE, MM, IP20, SK I
EAN-No.:	4,05E+12
Weight:	0,57 kg

Special features:
- usable as recessed and surface mounted version
- 350° swiveling and 90° tilt
- direct connection to 230V

Bedside reading luminaire

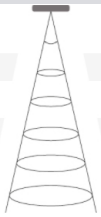

20°	Ø	ww
0,5m	150	4200 lx
1,0m	300	1050 lx
1,5m	450	467 lx
2,0m	600	263 lx
2,5m	750	168 lx

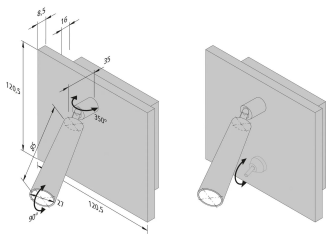

Order number:
20203100302

article in stock

available versions

Choose from the options below. The currently selected one is highlighted in color.

article number	description	colour of housing
20203100302	BL1-LED recessed/surface mounted 3W black	Black
20203100802	BL1-LED recessed/surface mounted 3W stainless steel look	Stainless steel
20203101302	BL1-LED recessed/surface mounted 3W black	Black
20203101802	BL1-LED recessed/surface mounted 3W stainless steel look	Stainless steel
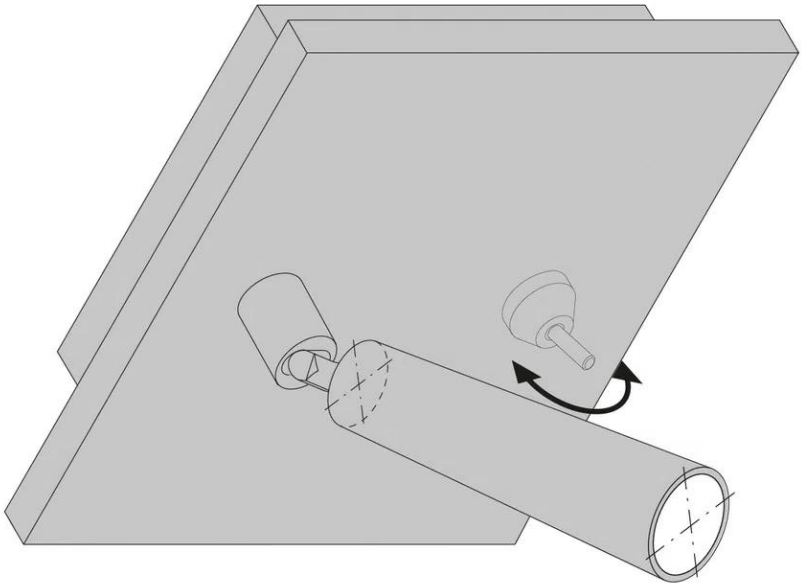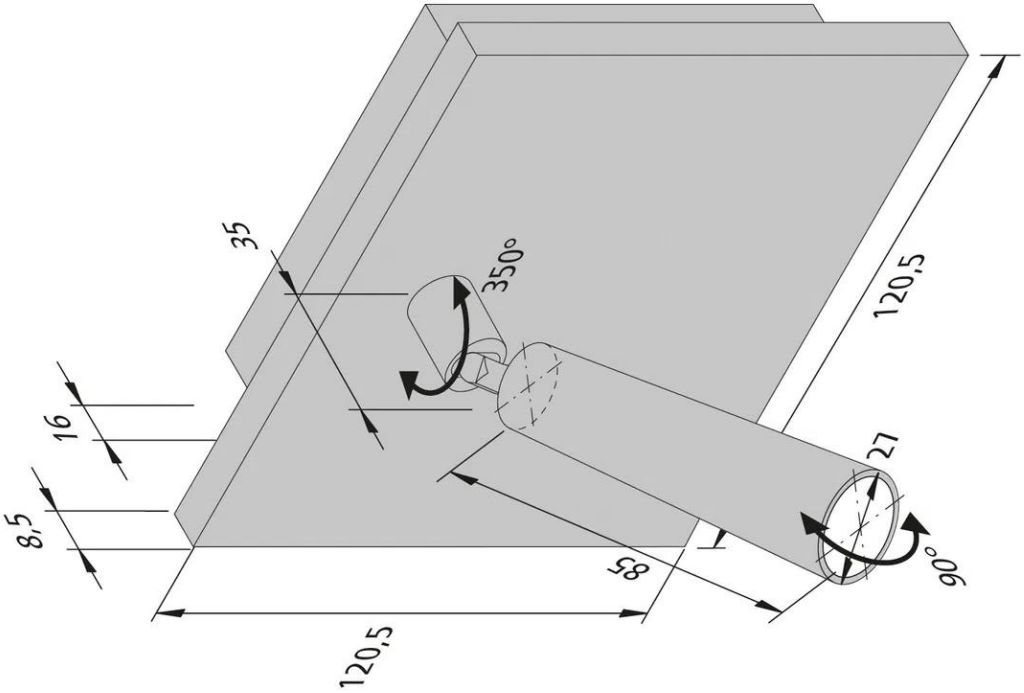
Order number: 20203100302