Wall

230V flush-mounted wall recessed luminaire for 68mm hole Wall I Up & Down 1,8W white RAL 9016

Description:
LED recessed wall light, simple installation in standard flush-mounted and cavity wall boxes, direct connection to 230V with integrated through-wiring, no visible light points; versions "I" with integrated invisible motion detector (run-on time: 3 min.)

Connection:	220 - 240V / 50 - 60Hz
Life:	L70/B10 >= 60.000h
Light colour:	3000K warm white
Beam angle:	120°
Energy efficiency:	LED: 105 lm/W luminaire: 90 lm (50 lm/W)
Energy efficiency class:	G
Colour rendering:	Ra/CRI >= 84
Symbols:	CE, MM, ENEC18, IP20, SK I
EAN-No.:	4,05E+12
Weight:	0,07 kg

Special features:
- quick and easy installation due to standard surface pattress box and flush-mounted socket
- direct connection to 230V
- no visible luminous spots
- decorative rings also available individually NEW: versions "I" with integrated invisible motion detector (run-on time: 3 min.)

Drilling hole

68mm

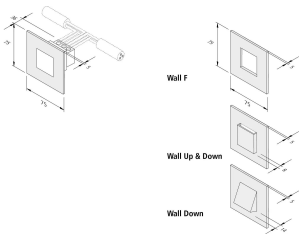

Order number:
20202721201

limited availability

available versions

Choose from the options below. The currently selected one is highlighted in color.

article number	description	colour of housing	energy efficiency
20202720201	Wall F 0,9W white RAL 9016	White	LED: 105 lm/W luminaire: 50 lm (55 lm/W)
20202720208	Wall F 0,9W stainless steel	Stainless steel	LED: 105 lm/W luminaire: 50 lm (55 lm/W)
20202720101	Wall F 1,8W white RAL 9016	White	LED: 105 lm/W luminaire: 90 lm (50 lm/W)
20202720108	Wall F 1,8W stainless steel	Stainless steel	LED: 105 lm/W luminaire: 90 lm (50 lm/W)
20202721101	Wall Up & Down 1,8W white RAL 9016	White	LED: 105 lm/W luminaire: 90 lm (50 lm/W)
20202722101	Wall Down 1,8W white RAL 9016	White	LED: 105 lm/W luminaire: 90 lm (50 lm/W)
20202722108	Wall Down 1,8W stainless steel	Stainless steel	LED: 105 lm/W luminaire: 90 lm (50 lm/W)
20202720401	Wall IF 1,8W white RAL 9016	White	LED: 105 lm/W luminaire: 90 lm (50 lm/W)
20202720408	Wall IF 1,8W stainless steel	Stainless steel	LED: 105 lm/W luminaire: 90 lm (50 lm/W)
20202721201	Wall I Up & Down 1,8W white RAL 9016	White	LED: 105 lm/W luminaire: 90 lm (50 lm/W)
20202721208	Wall I Up & Down 1,8W stainless steel	Stainless steel	LED: 105 lm/W luminaire: 90 lm (50 lm/W)
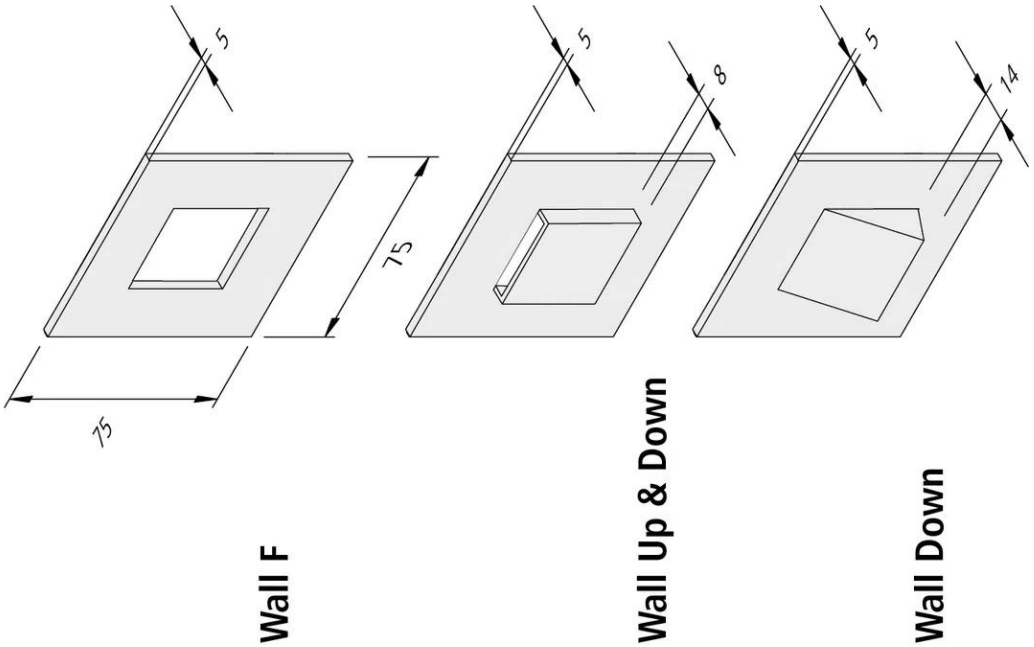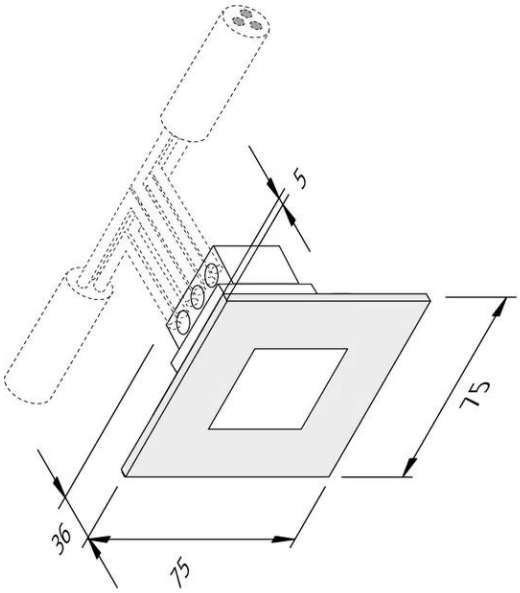
Order number: 20202721201