EcoLite F HO

IP 20

High-output 230 V surface-mounted linear light with area lighting LED EcoLite F HO 1440mm 21,5W ww

Description:
Very compact LED-Light for 230 V, small rigid connector for minimum spacing between luminaires, easy installation using the included clip mounting, light colour warm white approx. 3000 K, optional accessories such as horizontal connection or interconnection cable. Light colour: 3000 K warm white. Incl. Mounting clip.

Connection:	220 - 240V / 50 - 60Hz
Light colour:	3000K Warm white
Beam angle:	170°
Energy efficiency:	LED: 135 lm/W; Leuchte: 1600 lm/m (110 lm/W)
Energy efficiency class:	N/A
Symbols:	IP20, SK II
Weight:	0,23 kg

Special features:
- Rigid connector for minimum spacing between luminaires
- Light colour: 3000 K warm white
- Incl. Mounting clip
- Incl. Connection coupler
- Design: Linear-Light
- 220–240 V / 50–60 Hz
- Protection rating: IP20

EcoLite F HO

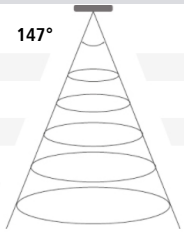

	Ø	ww	nw
0,5m	3376	1532 lx	1656 lx
1,0m	6752	383 lx	414 lx
1,5m	10128	170lx	184 lx
2,0m	13504	96 lx	104 lx
2,5m	16880	61 lx	66 lx

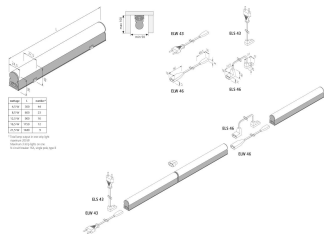

Order number:
20203260502

article in stock

HERA LED WARRANTY 5 YEARS

available versions

Choose from the options below. The currently selected one is highlighted in color.

article number	description	Gehäusefarbe	light colour
20203260102	LED EcoLite F HO 300mm 4,5W ww	Anodized aluminum	3000K Warm white
20203260202	LED EcoLite F HO 600mm 8,5W ww	Anodized aluminum	3000K Warm white
20203260302	LED EcoLite F HO 900mm 12,5W ww	Anodized aluminum	3000K Warm white
20203260402	LED EcoLite F HO 1150mm 16,5W ww	Anodized aluminum	3000K Warm white
20203260502	LED EcoLite F HO 1440mm 21,5W ww	Anodized aluminum	3000K Warm white
20203260103	LED EcoLite F HO 300mm 4,5W nw	Anodized aluminum	4000K Neutral white
20203260203	LED EcoLite F HO 600mm 8,5W nw	Anodized aluminum	4000K Neutral white
20203260303	LED EcoLite F HO 900mm 12,5W nw	Anodized aluminum	4000K Neutral white
20203260403	LED EcoLite F HO 1150mm 16,5W nw	Anodized aluminum	4000K Neutral white
20203260503	LED EcoLite F HO 1440mm 21,5W nw	Anodized aluminum	4000K Neutral white

Order number: 20203260502

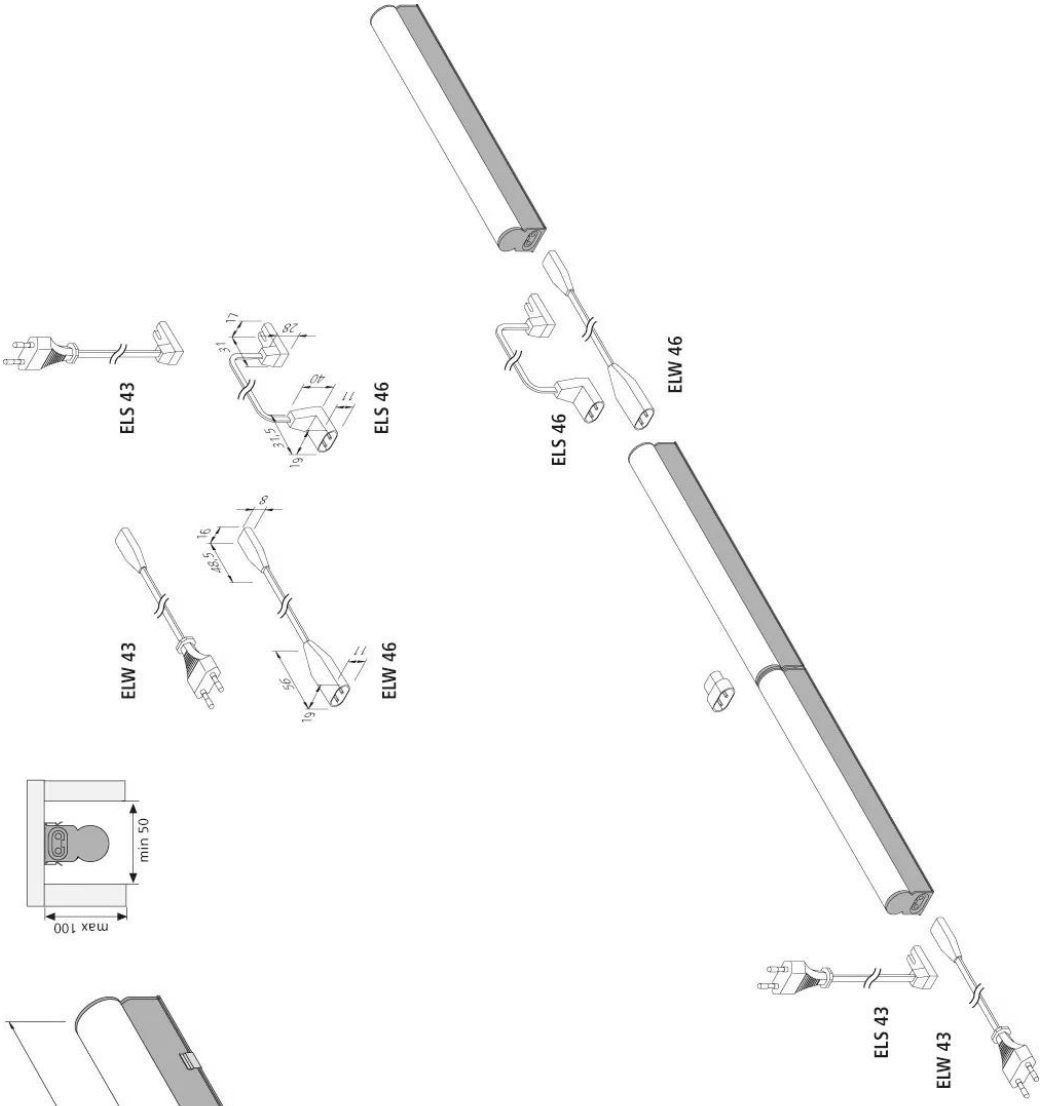

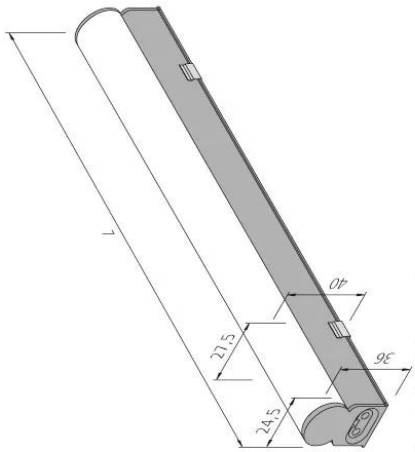

wattage	L	number*
4,5 W	300	44
8,5 W	600	23
12,5 W	900	16
16,5 W	1150	12
21,5 W	1440	9

* Total lamp output in one strip light maximum 200 W
Maximum 3 strip lights on one
N-circuit breaker 16A, single pole, type B