Spot - Mono

IP 20 | LED 24

Individually adjustable aluminium display-case spotlight LED Mono Spot 1,5W ww black





Description:
Swivel- and pivotable LED Spot, Height to 300 mm continuously adjustable, Metal housing, light colour warm white approx. 3000 K, Connection cable 2,2 m with LED 24 plug, optional accessories: Dimming controller with Wireless remote control, 1-10 V, DALI, ZigBee, Sonar or WiFi Control.

Connection:	LED-Trafo DC 24V
Light colour:	3000K Warm white
Beam angle:	38°
Energy efficiency:	LED: 110 lm/W; Leuchte: 80 lm/m (53 lm/W)
Energy efficiency class:	G
Symbols:	IP20, SK III
Weight:	0,15 kg

Special features:

- Height to 300 mm continuously adjustable
- 360° rotatable and 300° pivotable
- Light colour: 3000 K warm white
- Connection cable 2,2 m with LED 24 plug
- Beam angle 38°
- Design: Spot ?60°
- LED Transformer DC 24 V
- Connector system: LED 24
- Protection rating: IP20
- Dimmable with compatible control
- Adjustable version
- Housing colour: Black

LED Mono Spot 1,5 W

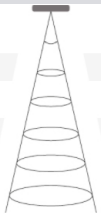

38°	Ø	ww	nw
0,5m	344	436 lx	520 lx
1,0m	689	109 lx	130 lx
1,5m	1033	48 lx	58 lx
2,0m	1377	27 lx	33 lx
2,5m	1722	17 lx	21 lx

Drilling hole



15mm

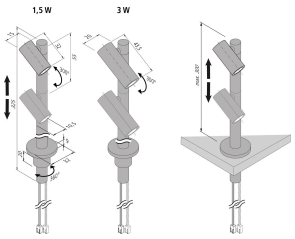

Order number:
20202780302

limited availability

HERA LED WARRANTY 5 YEARS

available versions

Choose from the options below. The currently selected one is highlighted in color.

article number	description	Gehäusefarbe	light colour	energy efficiency
20202780302	LED Mono Spot 1,5W ww black	Black	3000K Warm white	LED: 110 lm/W; Leuchte: 80 lm/m (53 lm/W)
20202780102	LED Mono Spot 1,5W ww anodised aluminium	Anodized aluminum	3000K Warm white	LED: 110 lm/W; Leuchte: 80 lm/m (53 lm/W)
20202780303	LED Mono Spot 1,5W nw black	Black	4000K Neutral white	LED: 110 lm/W; Leuchte: 80 lm/m (53 lm/W)
20202780103	LED Mono Spot 1,5W nw anodised aluminium	Anodized aluminum	4000K Neutral white	LED: 110 lm/W; Leuchte: 80 lm/m (53 lm/W)
20202790302	LED Mono Spot 3W ww black	Black	3000K Warm white	LED: 110 lm/W; Leuchte: 150 lm/m (50 lm/W)
20202790102	LED Mono Spot 3W ww anodised aluminium	Anodized aluminum	3000K Warm white	LED: 110 lm/W; Leuchte: 150 lm/m (50 lm/W)
20202790303	LED Mono Spot 3W nw black	Black	4000K Neutral white	LED: 110 lm/W; Leuchte: 150 lm/m (50 lm/W)
20202790103	LED Mono Spot 3W nw anodised aluminium	Anodized aluminum	4000K Neutral white	LED: 110 lm/W; Leuchte: 150 lm/m (50 lm/W)

Order number: 20202780302

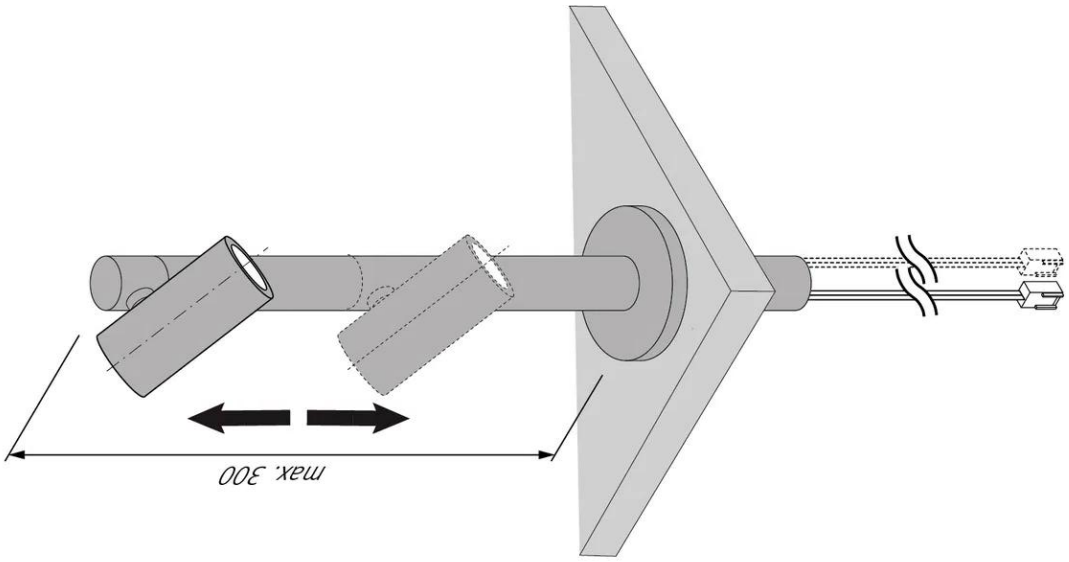

3 W

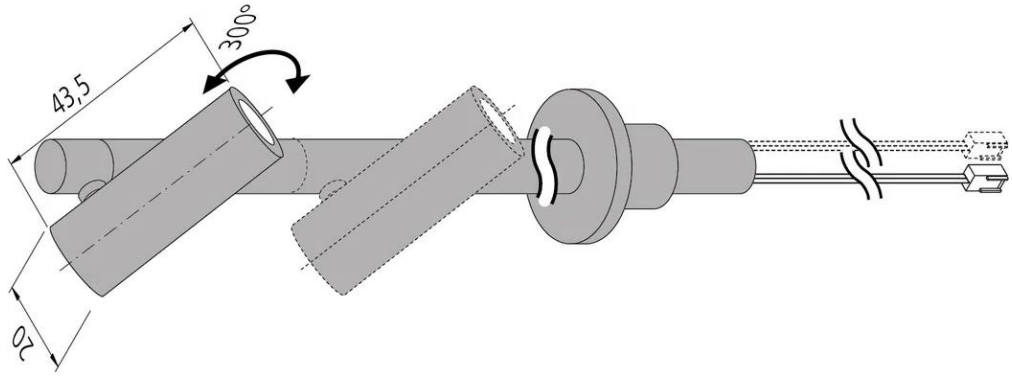

1,5 W

