Top-Stick FIR

Aluminium surface mounted luminiare with integrated IR sensor LED Top-Stick FIR 900mm 15,6W ww

Description:
Flat LED under cabinet luminaire with homogeneous planar light, housing aluminum, supply cable 2.5m with LED 24 plug and cable outlet to the rear, colour appearance ww (warm white) approx. 3000K,incl. touchless IR dimmer with NightLight function (additional small orientation LED), incl. 250mm self-adhesive white cable duct, if the luminaire is mounted centrally above the kitchen worktop and the cable has to be led back under the wall cabinet towards the back of the niche.

Connection:	LED-Trafo DC 24V
Life:	L70/B10 >= 60.000h
Light colour:	3000K warm white
Beam angle:	110°
Energy efficiency:	LED 107 lm/W; luminaire: 1100 lm/m (51 lm/W)
Energy efficiency class:	G
Colour rendering:	Ra/CRI >= 95
Symbols:	CE, MM, IP20, SK III
EAN-No.:	4,05E+12
Weight:	0,43 kg

Special features:
- only 12mm thickness
- anodized aluminium
- no visible luminous spots
- IR dimmer (to switch and dim) with memory function (after cut off from mains the last brightness is recovered)

Top-Stick F

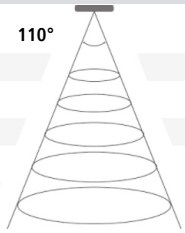

110°	Ø	ww	nw
0,5m	610	1532 lx	1640 lx
1,0m	1220	383 lx	410 lx
1,5m	1830	170 lx	182 lx
2,0m	2440	96 lx	103 lx
2,5m	3050	61 lx	66 lx

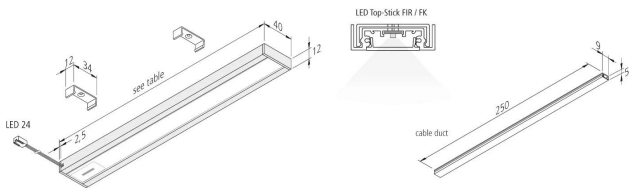

Order number:
61001425302

limited availability

HERA LED WARRANTY 5 YEARS

available versions

Choose from the options below. The currently selected one is highlighted in color.

article number	description	light colour
61001425102	LED Top-Stick FIR 450mm 7,1W ww	3000K warm white
61001425202	LED Top-Stick FIR 600mm 10,1W ww	3000K warm white
61001425302	LED Top-Stick FIR 900mm 15,6W ww	3000K warm white
61001425402	LED Top-Stick FIR 1200mm 20,9W ww	3000K warm white
61001425103	LED Top-Stick FIR 450mm 7,1W nw	4000K neutral white
61001425203	LED Top-Stick FIR 600mm 10,1W nw	4000K neutral white
61001425303	LED Top-Stick FIR 900mm 15,6W nw	4000K neutral white
61001425403	LED Top-Stick FIR 1200mm 20,9W nw	4000K neutral white
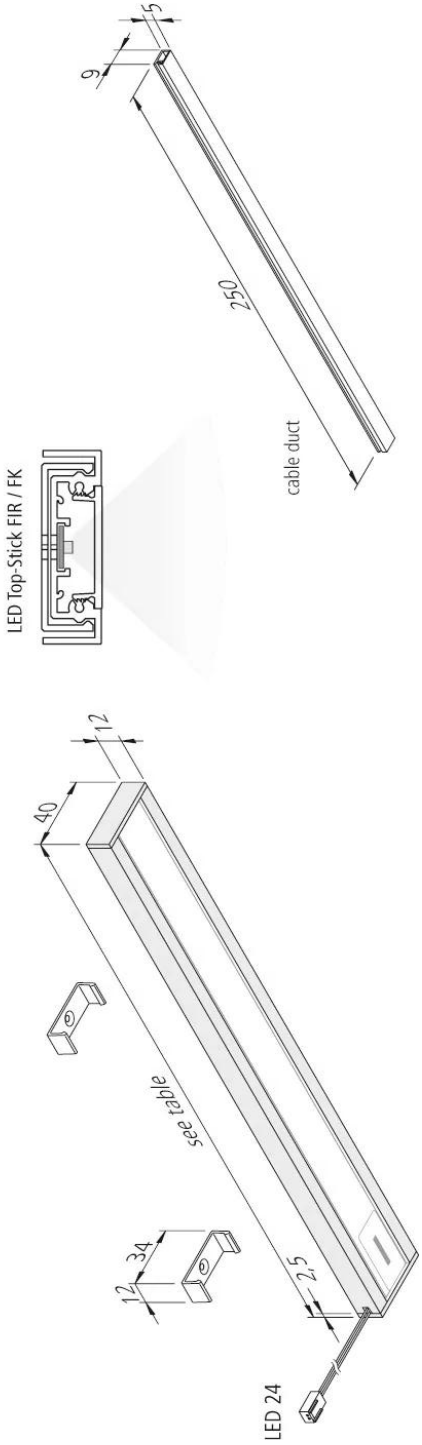
Order number: 61001425302