PS Mini

LED 24

Slotted rail with power supply 24V Slotted rail PS Mini B 2000mm anodised aluminium

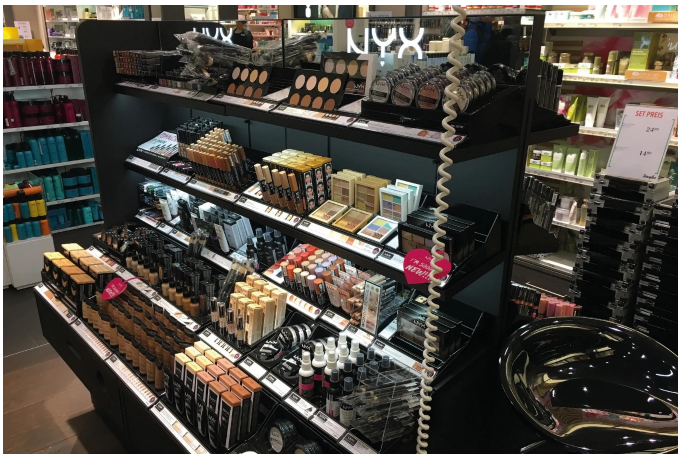

Description:
Slotted rail with power track, anodized aluminium, can be shortened to any length, accessories: power feed, adapter, end cap.

Connection: LED-Trafo DC 24V
Energy efficiency class: N/A
Weight: 0,81 kg

Special features:

- Invisible power routing integrated into the system
- Flush mounting possible
- Power routing on both sides with a minimum material thickness of 38 mm (2 x 19 mm)
- High flexibility thanks to stepless adjustment (tool-free)
- Adapter mount for shelf supports
- Without power routing
- LED transformer DC 24 V
- Plug-in system: LED 24
- Housing colour: anodized aluminium

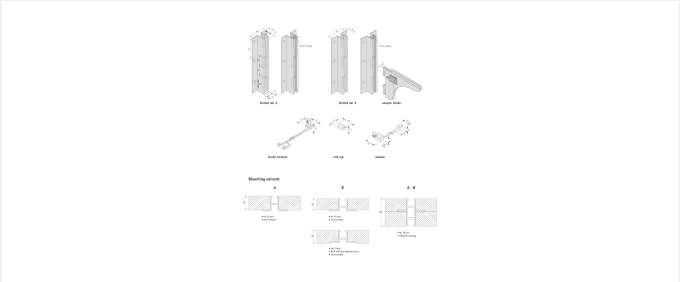

Order number:
21802040116

limited availability

HERA LED WARRANTY 5 YEARS

available versions

Choose from the options below. The currently selected one is highlighted in color.

article number	description	Gehäusefarbe
21802040026	Slotted rail PS Mini A 2000mm anodised aluminium + power track	Anodized aluminum
21802040126	Slotted rail PS Mini B 2000mm anodised aluminium + power track	Anodized aluminum
21802040006	Slotted rail PS Mini A 2000mm anodised aluminium	Anodized aluminum
21802040116	Slotted rail PS Mini B 2000mm anodised aluminium	Anodized aluminum
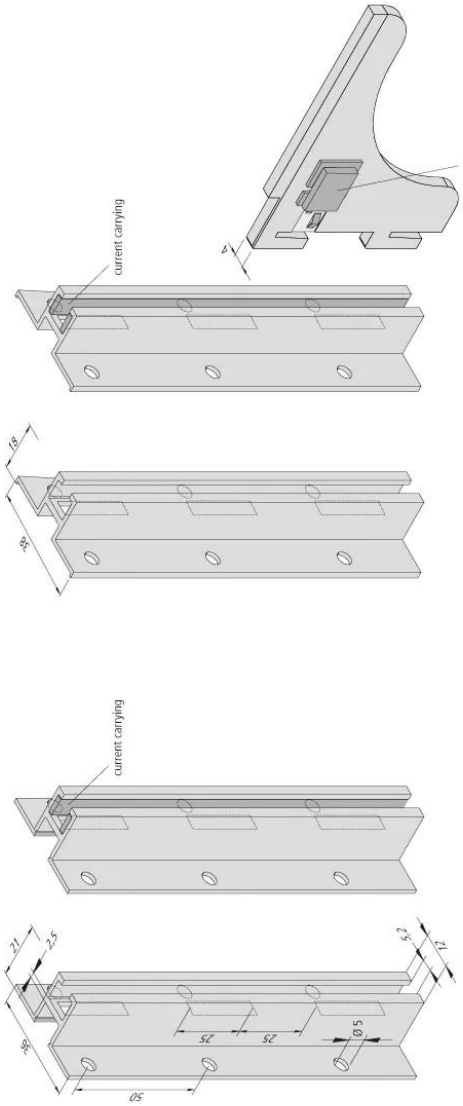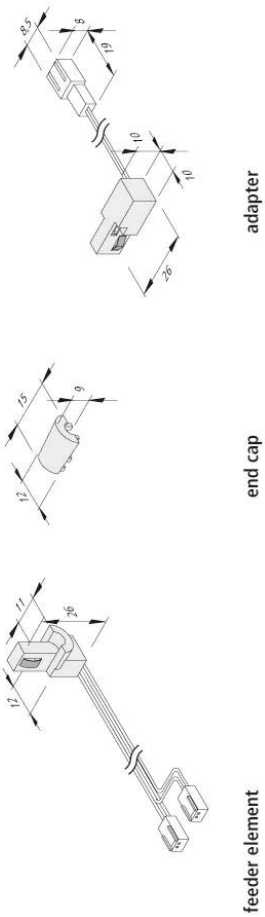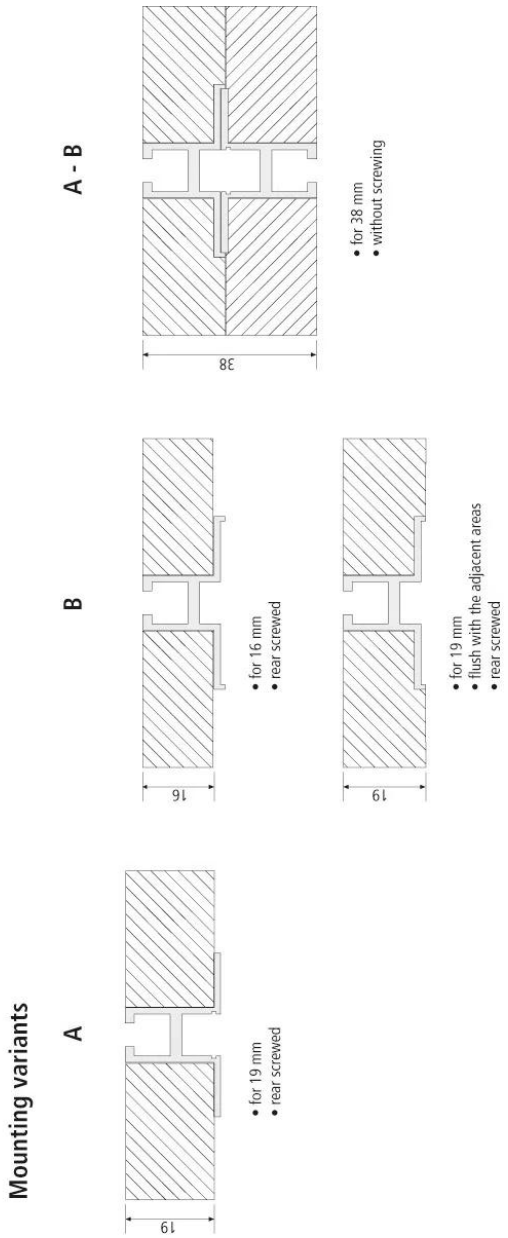
Order number: 21802040116