Perfil fresado 24mm

Aluminio LED Milled Profile 24/12mm 2,95m set of 5

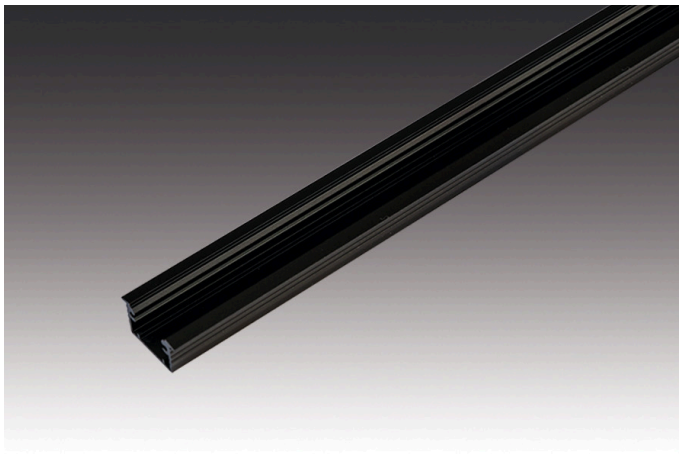

Descripción:
LED milled profile 24/12 mm for integration of LED Stick, Power-Line and RGB-Line and Tape, assembly in 20 mm wide and 12 mm deep groove, necessary accessory: front cover for covering the lateral milling radii and cover profile 15 mm

EAN-Nr.: 4051268164030
Gewicht: 2,85 kg

Particularidades:
- Milled profile for symmetrical illumination

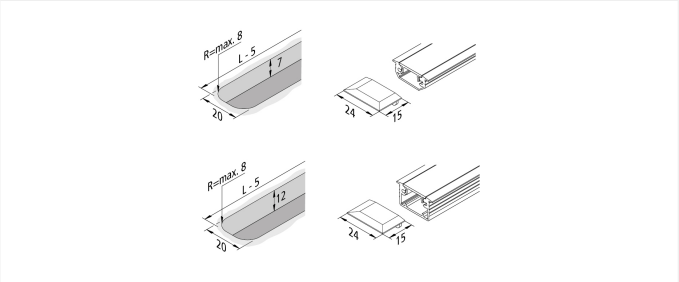

N.º de artículo:
61500031463

artículo disponible en stock

Versiones disponibles

Elija uno de los siguientes modelos. El seleccionado actualmente está resaltado.

N.º de artículo	Denominación	Color de la carcasa
61500033413	LED Milled Profile 24/7mm 1m	negro
61500033463	LED Milled Profile 24/7mm 2,95m set of 5	negro
61500031413	LED Milled Profile 24/12mm 1m	negro
61500031463	LED Milled Profile 24/12mm 2,95m set of 5	negro
61500031013	Front cover LED Milled Profile 24mm	negro
61500033410	LED Milled Profile 24/7mm 1m	aluminio anodizado
61500033461	LED Milled Profile 24/7mm 2,95m set of 5	aluminio anodizado
61500031410	LED Milled Profile 24/12mm 1m	aluminio anodizado
61500031461	LED Milled Profile 24/12mm 2,95m set of 5	aluminio anodizado
61500031011	Front cover LED Milled Profile 24mm	aluminio anodizado
61500031418	LED Milled Profile 24/12mm 1m	aspecto acero inoxidable
61500031468	LED Milled Profile 24/12mm 2,95m set of 5	aspecto acero inoxidable
61500031018	Front cover LED Milled Profile 24mm	aspecto acero inoxidable

Perfil fresado 24mm
LED Milled Profile 24/12mm 2,95m set of 5
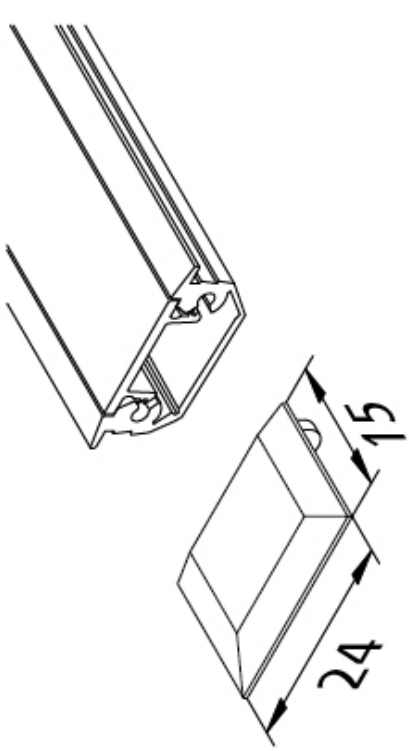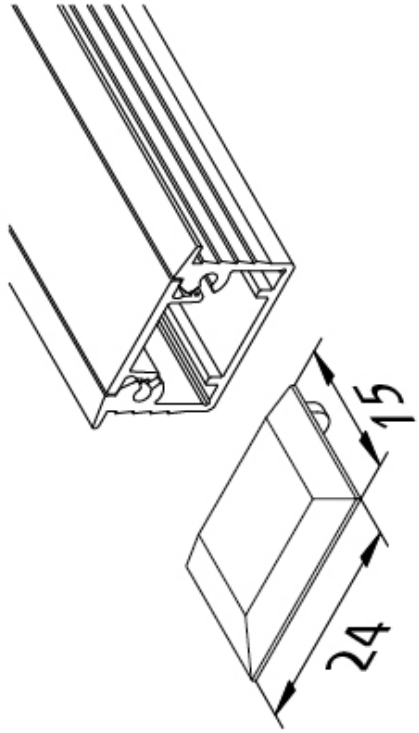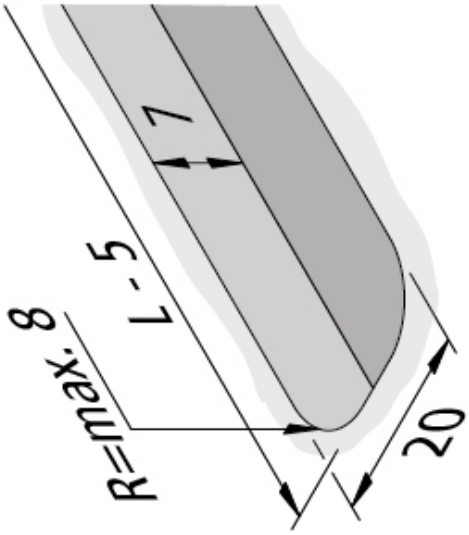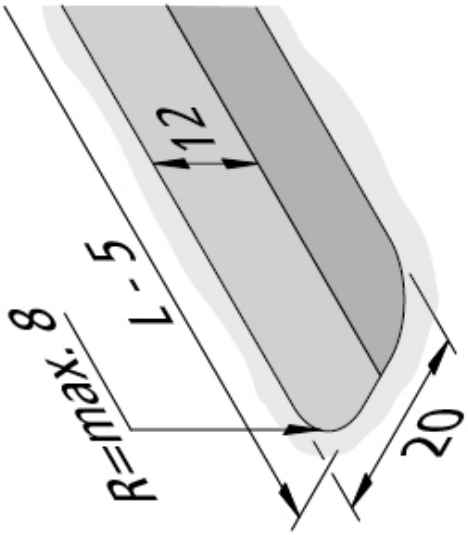
N.º de artículo: 61500031463