Evo-Stick F2

Powerful, pluggable, homogeneous linear luminaire 24V DC with IP65 LED Evo-Stick F2 300mm 42 LED 6W ww

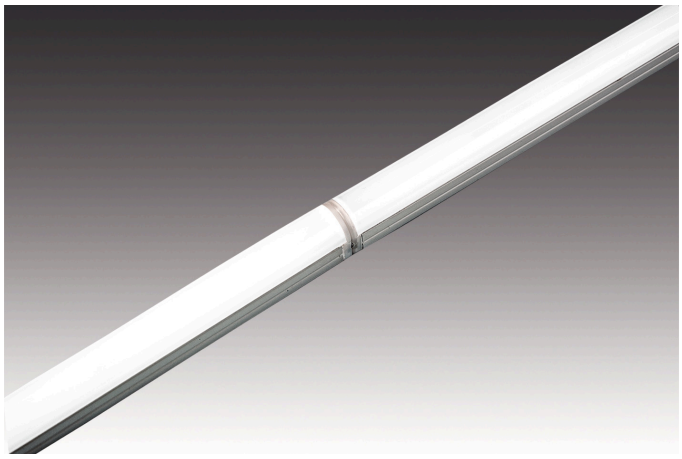

Descripción:
Pluggable LED stick with planar light in an aluminum profile, colour appearance warm white approx. 3000K, easy installation with attached clips, simply connect the supply cable and connect the LED Sticks up to 3m, optional accessories: dim controller with remote control, DALI, ZigBee or WiFi app

Conexión:	LED-Trafo DC 24 V
Vida útil:	L70/B10 >= 50.000 h
Lichtfarbe:	3000 K blanco cálido
Ausstrahlungswinkel:	140°
Eficiencia energética:	LED 129 lm/W; luminaire: 1900 lm/m (95 lm/W)
Energieeffizienzklasse:	F
Reproducción de colores:	Ra/CRI >= 90
Zeichen:	CE, MM, IP65, SK III
EAN-Nr.:	4051268208659
Gewicht:	0,072 kg

Particularidades:
- max. 60 W or 3 m per supply cable
- quick and easy installation due to double-sided adhesive tape
- with IP65, suitable for applications requiring higher ingress protection (general humidity, bathroom, kitchen, shops)
- halogen-free cables

Evo-Stick F2

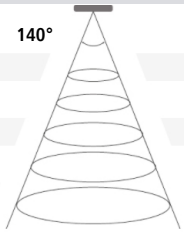

	Ø	Meat R	xw	ww	nw
0,5m	670	1424 lx	2236 lx	2260 lx	2360 lx
1,0m	1340	356 lx	559 lx	565 lx	590 lx
1,5m	2010	158 lx	248 lx	251 lx	262 lx
2,0m	2680	89 lx	140 lx	141 lx	148 lx
2,5m	3350	57 lx	89 lx	90 lx	94 lx

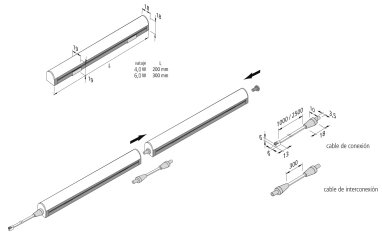

N.º de artículo:
20202930202

disponibilidad restringida probable

Versiones disponibles

Elija uno de los siguientes modelos. El seleccionado actualmente está resaltado.

N.º de artículo	Denominación	Eficiencia energética	Color de la luz
20202930104	LED Evo-Stick F2 200mm 28 LED 4W xw	LED 129 lm/W; luminaire: 1900 lm/m (95 lm/W)	2700 K blanco extra cálido
20202930204	LED Evo-Stick F2 300mm 42 LED 6W xw	LED 129 lm/W; luminaire: 1900 lm/m (95 lm/W)	2700 K blanco extra cálido
20202930102	LED Evo-Stick F2 200mm 28 LED 4W ww	LED 129 lm/W; luminaire: 1900 lm/m (95 lm/W)	3000 K blanco cálido
20202930202	LED Evo-Stick F2 300mm 42 LED 6W ww	LED 129 lm/W; luminaire: 1900 lm/m (95 lm/W)	3000 K blanco cálido
20202930103	LED Evo-Stick F2 200mm 28 LED 4W nw	LED 129 lm/W; luminaire: 1900 lm/m (95 lm/W)	4000 K blanco neutro
20202930203	LED Evo-Stick F2 300mm 42 LED 6W nw	LED 129 lm/W; luminaire: 1900 lm/m (95 lm/W)	4000 K blanco neutro
20202930105	LED Evo-Stick F2 200mm 28 LED 4W Meat R	LED 80 lm/W; luminaire: 1200 lm/m (60 lm/W)	carne (color de luz especial)
20202930205	LED Evo-Stick F2 300mm 42 LED 6W Meat R	LED 80 lm/W; luminaire: 1200 lm/m (60 lm/W)	carne (color de luz especial)
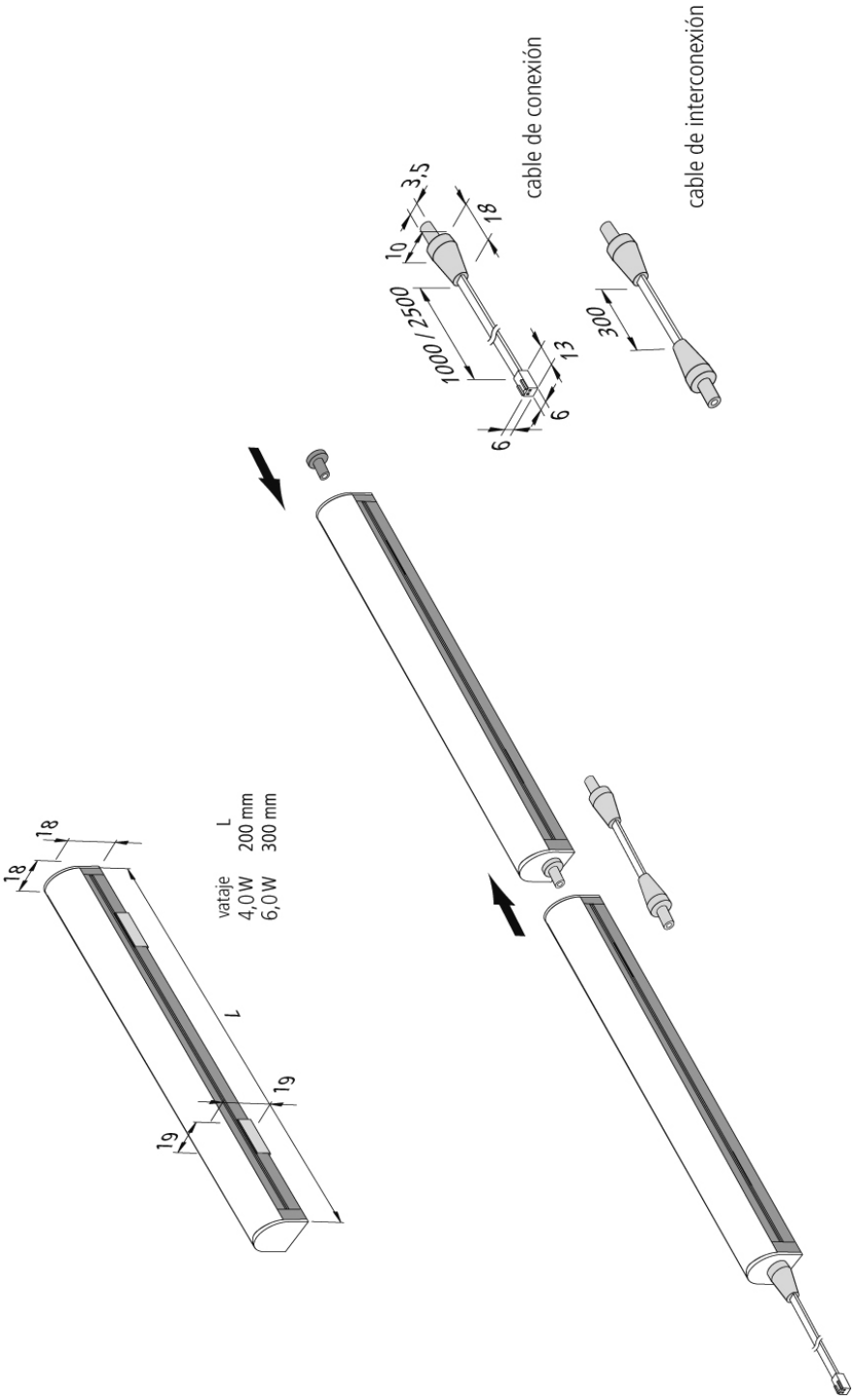
N.º de artículo: 20202930202