Pipe

360° rotatable aluminium over cabinet luminaire LED Pipe 310mm 7,5W xw

Descrizione:
Rotating, round LED surface-mounted luminaire with 14mm diameter, housing aluminum, 25mm supply cable with LED 24 plug and 25mm connection cable with LED 24 socket, easy installation with incl. screws, colour appearance xw (extra warm white) approx. 2700K, optional accessories: magnet holding clip, dim controller with remote control, DALI or 1-10V dim controller with remote control, DALI or 1-10V

Collegamento: LED-Trafo DC 24 V
Durata: L70/B10 >= 50.000 h
Lichtfarbe: 2700 K bianco extra caldo
Ausstrahlungswinkel: 100°
Efficienza energetica: LED 113 lm/W; luminaire: 1530 lm/m (61 lm/W)
Energieeffizienzklasse: G
Resa del colore: Ra/CRI >= 95
Zeichen: CE, MM, IP20, SK III
EAN-Nr.: 4051268115346
Gewicht: 0,065 kg

Particolarità:
- LEDs rotating 360°, max. 60 W per supply cable
- assembly with screws in wood or with magnet holding clip as accessory

Pipe

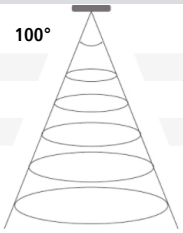

100°	Ø	xw	nw	cw
0,5m	590	2580 lx	2660 lx	2740 lx
1,0m	1180	645 lx	665 lx	685 lx
1,5m	1770	287 lx	296 lx	304 lx
2,0m	2360	161 lx	166 lx	171 lx
2,5m	2950	103 lx	106 lx	110 lx

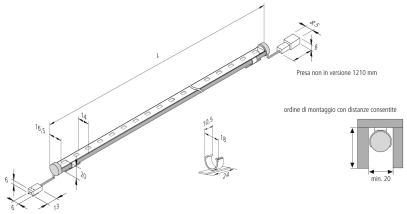

N. articolo:
61001491103

eventualmente disponibili in quantità limitata

Versioni disponibili

Scegli tra le versioni seguenti. Quella attualmente selezionata è evidenziata a colori.

N. articolo	Denominazione	Colore della luce
61001491103	LED Pipe 310mm 7,5W xw	2700 K bianco extra caldo
61001491203	LED Pipe 610mm 15,0W xw	2700 K bianco extra caldo
61001491303	LED Pipe 910mm 22,5W xw	2700 K bianco extra caldo
61001490403	LED Pipe 1210mm 30,0W xw	2700 K bianco extra caldo
61001491102	LED Pipe 310mm 7,5W ww	3000 K bianco caldo
61001491202	LED Pipe 610mm 15,0W ww	3000 K bianco caldo
61001491302	LED Pipe 910mm 22,5W ww	3000 K bianco caldo
61001490402	LED Pipe 1210mm 30,0W ww	3000 K bianco caldo
61001491101	LED Pipe 310mm 7,5W nw	4000 K bianco neutro
61001491201	LED Pipe 610mm 15,0W nw	4000 K bianco neutro
61001491301	LED Pipe 910mm 22,5W nw	4000 K bianco neutro
61001490401	LED Pipe 1210mm 30,0W nw	4000 K bianco neutro
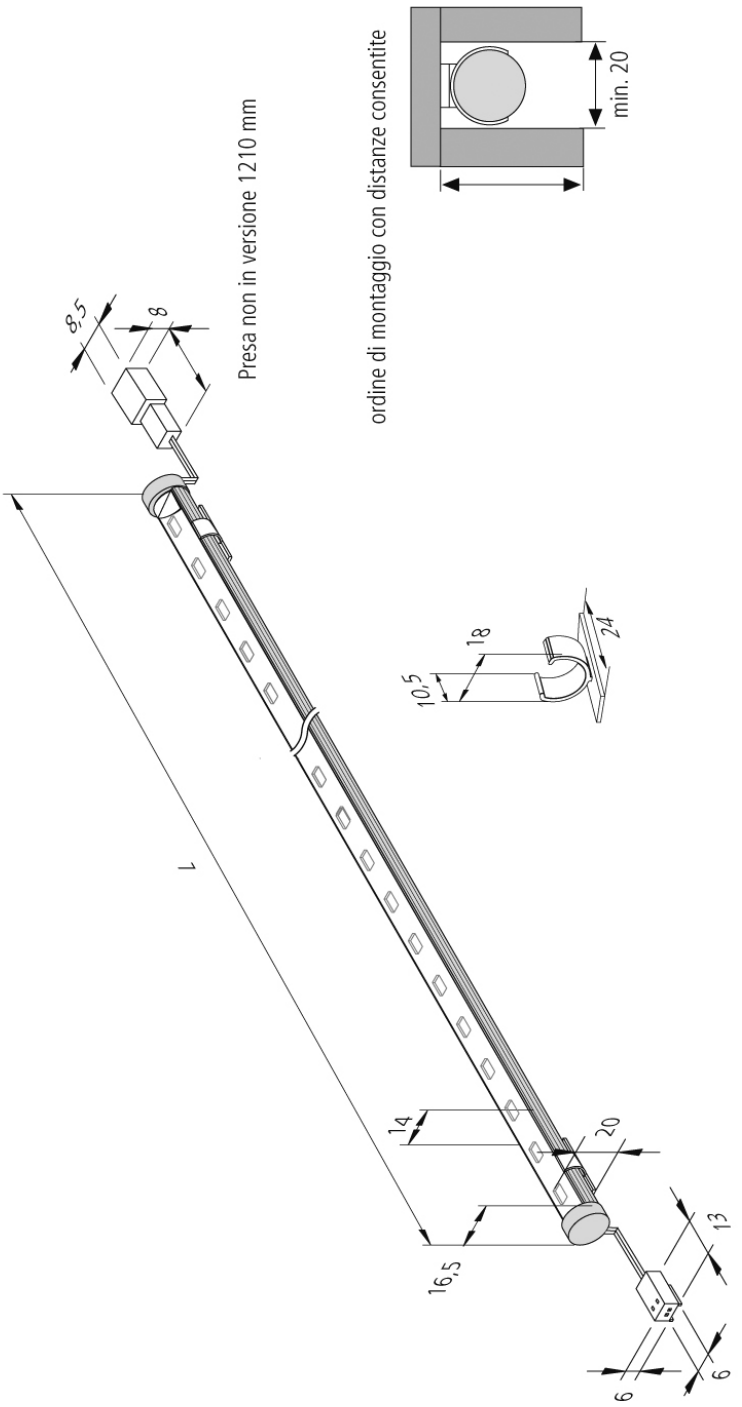
N. articolo: 61001491103