Glas-Line

Under cabinet kitchen luminaire LED Glas-Line 3,8W ww anodized aluminium

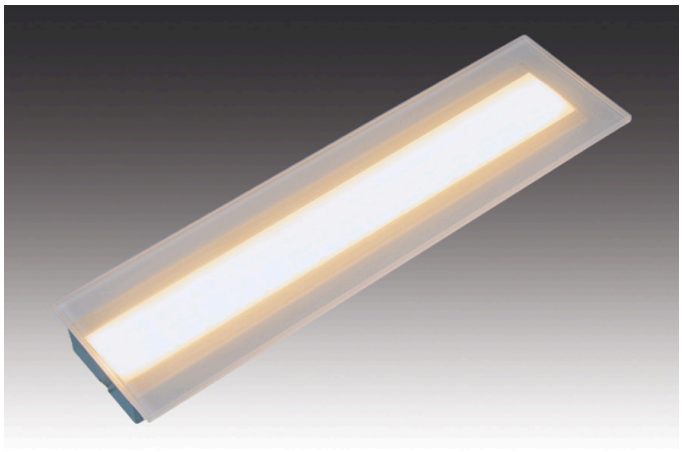

Descrizione:
Flat LED under cabinet luminaire, housing anodized aluminium with frosted genuine glass cover, supply cable 2,5m with LED 24 plug, colour appearance ww (warm white) approx. 3000 K, optional accessories: dim controller with remote control, WiFi, DALI or 1-10V dimmer

Collegamento:	LED-Trafo DC 24 V
Durata:	L70/B10 >= 60.000 h
Lichtfarbe:	3000 K bianco caldo
Ausstrahlungswinkel:	110°
Efficienza energetica:	LED: 107 lm/W; luminaire: 240 lm (63 lm/W)
Energieeffizienzklasse:	G
Resa del colore:	Ra/CRI >= 95
Zeichen:	CE, MM, IP20, SK III
EAN-Nr.:	4051268129671
Gewicht:	0,22 kg

Particolarità:

- easy mounting with concealed mounting clips
- frosted genuine glass cover

Glas-Line

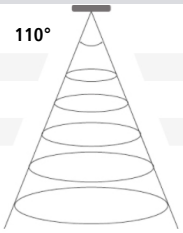

	Ø	ww	nw
0,5m	620	348 lx	376 lx
1,0m	1240	87 lx	94 lx
1,5m	1860	39 lx	42 lx
2,0m	2480	22 lx	24 lx
2,5m	3100	14 lx	15 lx

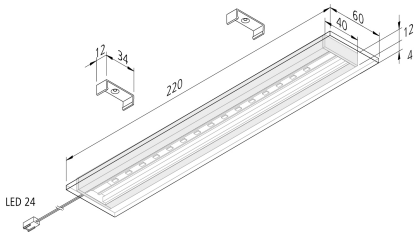

N. articolo:
61001820102

eventualmente disponibili in quantità limitata

Versioni disponibili

Scegli tra le versioni seguenti. Quella attualmente selezionata è evidenziata a colori.

N. articolo	Denominazione	Colore della luce
61001820102	LED Glas-Line 3,8W ww anodized aluminium	3000 K bianco caldo
61001820103	LED Glas-Line 3,8W nw anodized aluminium	4000 K bianco neutro
61057330102	set of 3 LED Glas-Line 3,8W ww anodized aluminium	3000 K bianco caldo
61057330103	set of 3 LED Glas-Line 3,8W nw anodized aluminium	4000 K bianco neutro
61057330202	set of 3 LED Glas-Line 3,8W ww anodized aluminium with switch	3000 K bianco caldo
61057330203	set of 3 LED Glas-Line 3,8W nw anodized aluminium with switch	4000 K bianco neutro
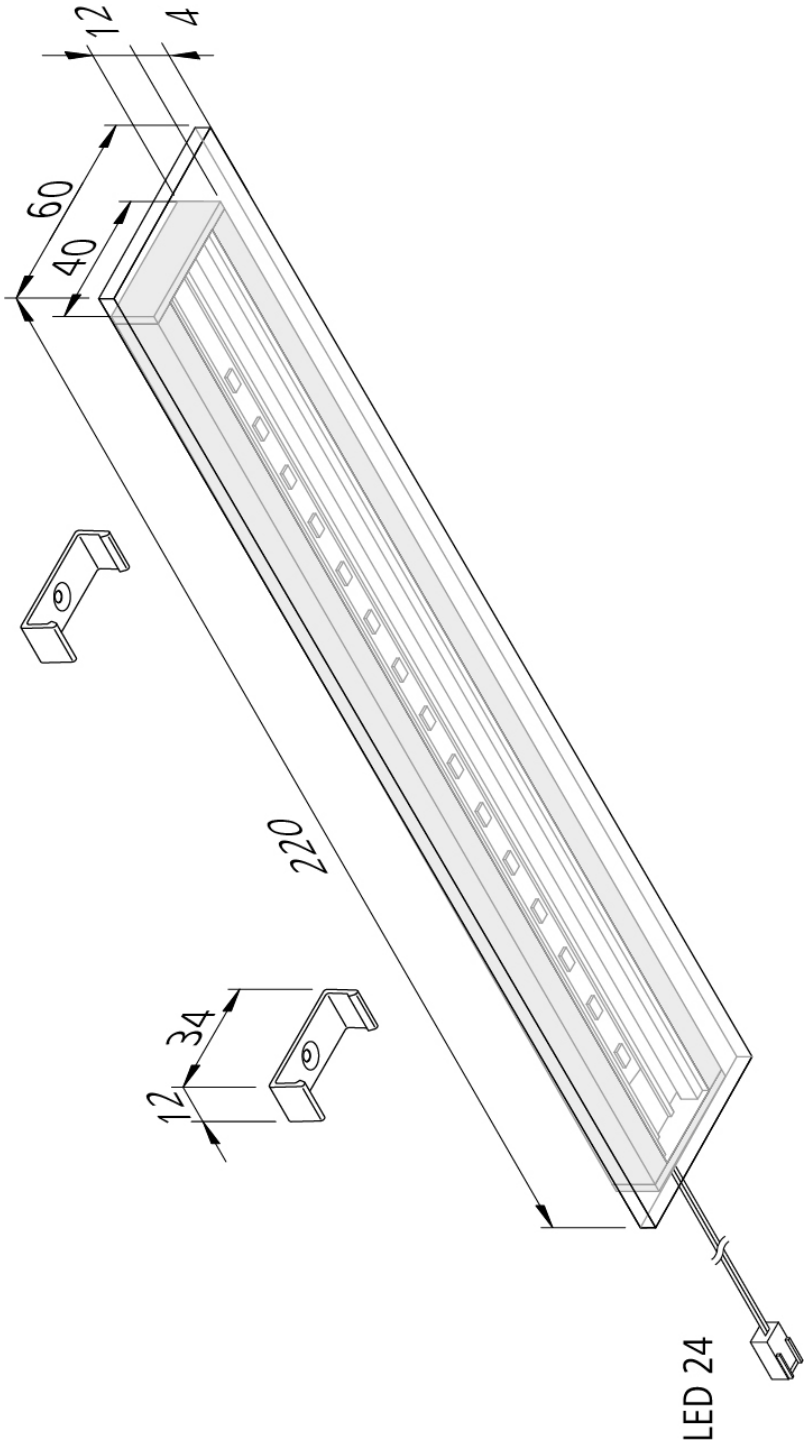
N. articolo: 61001820102