Accessories tapes

Supply cable LED Tape 1200 1000mm

Descrizione:
supply cable LED Tape 1200 with LED 24-plug, as connection between transformer and LED strip

Collegamento: LED-Trafo DC 24V
Zeichen: CE, MM, IP20, SK III
EAN-Nr.: 4,05E+12
Gewicht: 0,02 kg

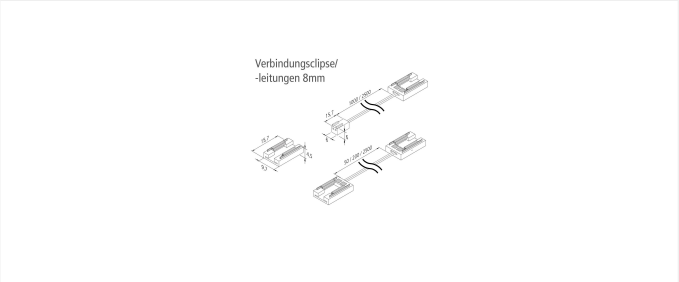

N. articolo:
21528241001

eventualmente disponibili in quantità limitata

Versioni disponibili

Scegli tra le versioni seguenti. Quella attualmente selezionata è evidenziata a colori.

N. articolo	Denominazione	Grado di protezione	Sistema di innesto	Classe di protezione	Collegamento
21528308101	Connection cable 8mm Tape 1000mm max. 60W	IP20	LED 24	SK3	LED-Trafo DC 24V
21528308102	Connection cable 8mm Tape 2500mm max. 60W	IP20	LED 24	SK3	LED-Trafo DC 24V
21528310101	Supply cable 10mm Tape 1000mm max. 60W	IP20	LED 24	SK3	LED-Trafo DC 24V
21528310102	Supply cable 10mm Tape 2500mm max. 60W	IP20	LED 24	SK3	LED-Trafo DC 24V
21528308001	Connecting clip 8mm Tape max. 60W	IP20	LED 24	SK3	-
21528310001	Connecting clip 10mm Tape max. 60W	IP20	LED 24	SK3	-
21528308011	Corner clip 8mm Tape max. 60W	IP20	LED 24	SK3	-
21528310011	Corner clip 10mm Tape max. 60W	IP20	LED 24	SK3	-
21528308201	Connecting cable 8mm Tape 50mm max. 60W	IP20	LED 24	SK3	-
21528308202	Connecting cable 8mm Tape 200mm max. 60W	IP20	LED 24	SK3	-
21528308203	Connecting cable 8mm Tape 2500mm max. 60W	IP20	LED 24	SK3	-
21528310201	Connecting cable 10mm Tape 50mm max. 60W	IP20	LED 24	SK3	-
21528310202	Connecting cable 10mm Tape 200mm max. 60W	IP20	LED 24	SK3	-
21528310203	Connecting cable 10mm Tape 2500mm max. 60W	IP20	LED 24	SK3	-
21528041001	Supply cable LED Tape 1000mm	IP20	LED 24	SK3	LED-Trafo DC 24V
21528042501	Supply cable LED Tape 2500mm	IP20	LED 24	SK3	LED-Trafo DC 24V
21528241001	Supply cable LED Tape 1200 1000mm	IP20	LED 24	SK3	LED-Trafo DC 24V
21528242501	Supply cable LED Tape 1200 2500mm	IP20	LED 24	SK3	LED-Trafo DC 24V
21528112501	Supply cable LED Tape 1200 2500mm	IP20	LED 24	SK3	LED-Trafo DC 24V
21530072501	Cavo di collegamento 2,5 m per saldatura (max. 60W)	IP20	LED 24	SK3	LED-Trafo DC 24V
21528000101	Corner clip LED Tape	IP20	LED 24	SK3	-
21528000001	Connecting clip LED Tape	IP20	LED 24	SK3	-
21528060301	Connecting cable LED Tape 50mm	IP20	LED 24	SK3	-
21528060201	Connecting cable LED Tape 200mm	IP20	LED 24	SK3	-
21528062501	Connecting cable LED Tape 2500mm	IP20	LED 24	SK3	-
21528200001	Connecting clip LED Tape 1200	IP20	LED 24	SK3	-
21528260001	Connecting cable LED Tape 1200 50mm	IP20	LED 24	SK3	-
21528260201	Connecting cable LED Tape 1200 200mm	IP20	LED 24	SK3	-
21528262501	Connecting cable LED Tape 1200 2500mm	IP20	LED 24	SK3	-
61500031101	Double-sided adhesive foil 5m roll	-	-	-	-
61500030501	Magnetic tape for Mounting Profile 5m roll	-	-	-	-
20204010370	Mounting clip Tape F, set of 3	-	-	-	-
20204010360	Mounting clip Tape L, set of 5	-	-	-	-
21528308021	XT-clip 8mm Tape max. 60W	IP20	LED 24	SK3	-

N. articolo: 21528241001
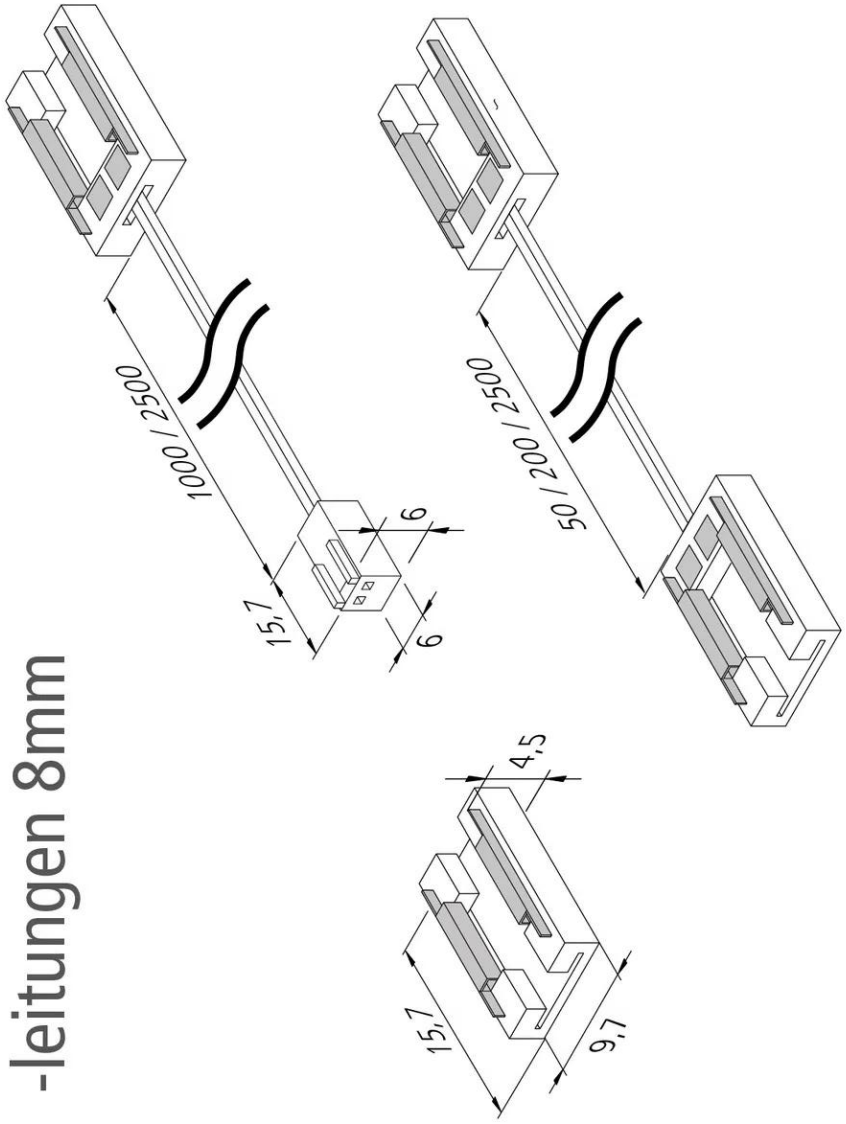
Verbindungsclipse/ -leitungen 8mm