IR-S / IR-DS

Contactless furniture installation switch IR-DS with sensor K 80 AE

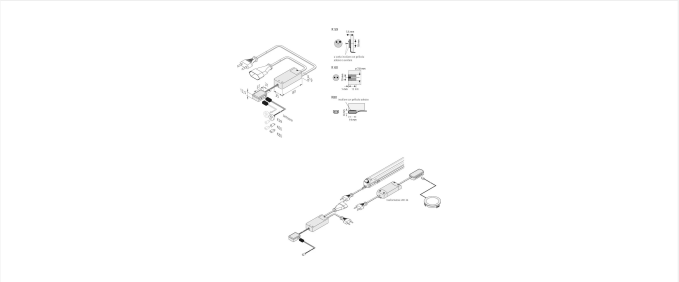

Descrizione:
contactless door switch for connection of class II equipment for luminaires, mains cable 3m and switching line 0,3m each stripped and with ferrules for easy connection to screw-type or clip-type terminals, sensor cable 3m with sensor K80, switch function: opening of the door switches the light on and closing the door switches it off again.

Collegamento: 220 - 240V / 50 - 60Hz
Zeichen: CE, MM, IP20, SK II
EAN-Nr.: 4,05E+12
Gewicht: 0,19 kg

Particolarità:
- motion of door operates switch
- opening the door switches the light on and closing the door switches it off again
- suitable for switching LED transformers max. 250W or SlimLite ® lighting rows up to 3 luminaires
- option of two sensors (alternate switching) (lights on when one door is opened)
- distance between sensor and the inside of the door should be 4 up to 50mm (depending on the surface)

N. articolo:
50612080322

eventualmente disponibili in quantità limitata

Versioni disponibili

Scegli tra le versioni seguenti. Quella attualmente selezionata è evidenziata a colori.

N. articolo	Denominazione
50612060111	IR-S with sensor K 59 Euro
50612060211	IR-S with sensor K 60 Euro
50612060311	IR-S with sensor K 80 Euro
50612060112	IR-S with sensor K 59 AE
50612060212	IR-S with sensor K 60 AE
50612060312	IR-S with sensor K 80 AE
50612080111	IR-DS with sensor K 59 Euro
50612080241	IR-DS with sensor K 60 Euro
50612080321	IR-DS with sensor K 80 Euro
50612090111	IR-DS2 with 2 sensors K 59 Euro
50612090221	IR-DS2 with 2 sensors K 60 Euro
50612090311	IR-DS2 with 2 sensors K 80 Euro
50612080112	IR-DS with sensor K 59 AE
50612080242	IR-DS with sensor K 60 AE
50612080322	IR-DS with sensor K 80 AE
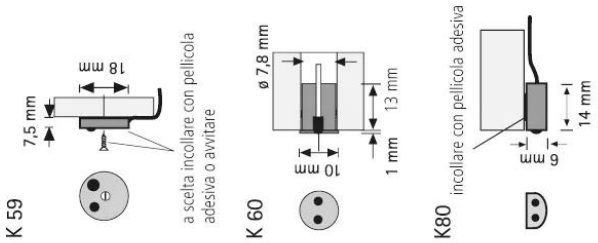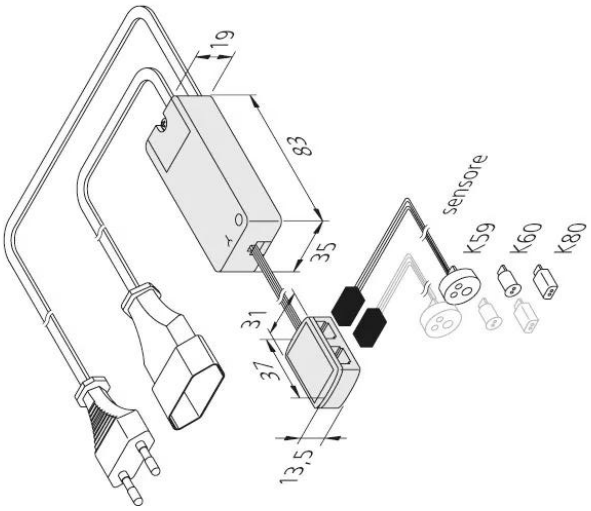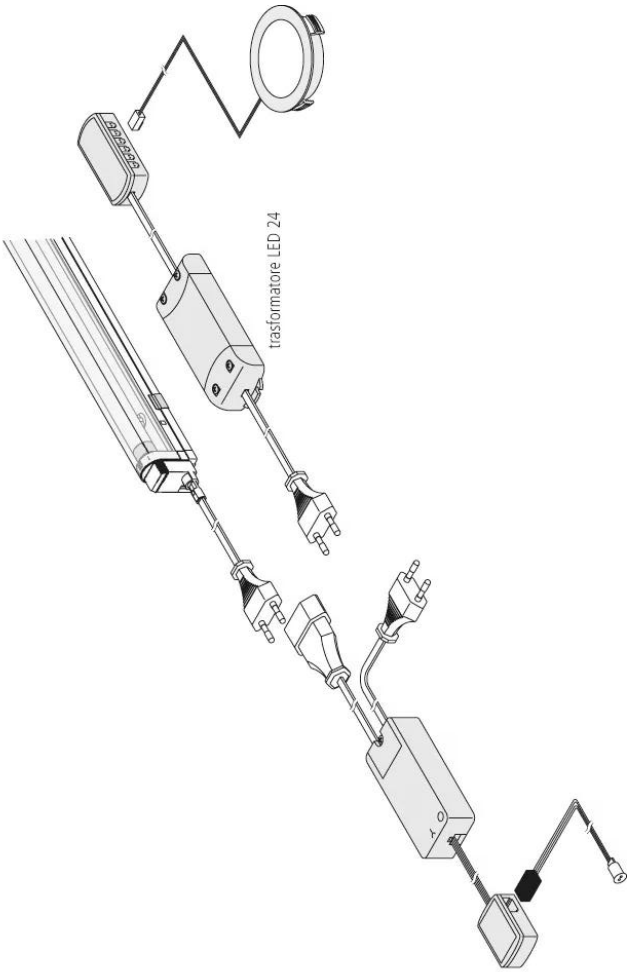
N. articolo: 50612080322