# Evo-Stick F2

Powerful, pluggable, homogeneous linear luminaire 24V DC with IP65  LED Evo-Stick F2 300mm 42 LED 6W nw

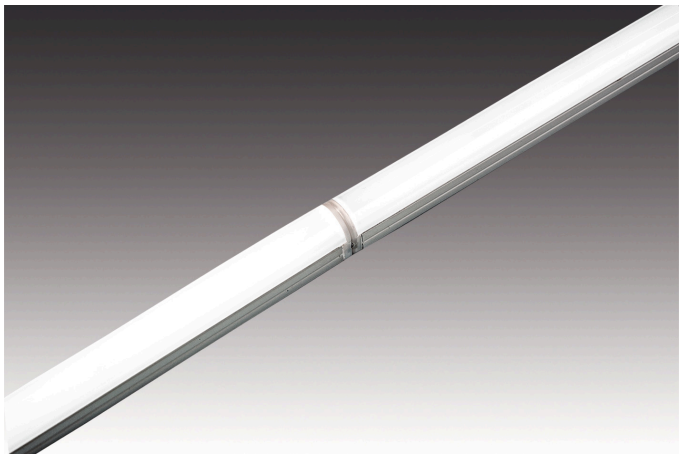

**Descrizione:**
Pluggable LED stick with planar light in an aluminum profile, colour appearance neutral white approx. 4000K, easy installation with attached clips, simply connect the supply cable and connect the LED Sticks up to 3m, optional accessories: dim controller with remote control, DALI, ZigBee or WiFi app

| | |
|---|---|
| **Collegamento:** | LED-Trafo DC 24 V |
| **Durata:** | L70/B10 >= 50.000 h |
| **Lichtfarbe:** | 4000 K bianco neutro |
| **Ausstrahlungswinkel:** | 140° |
| **Efficienza energetica:** | LED 129 lm/W; luminaire: 1900 lm/m (95 lm/W) |
| **Energieeffizienzklasse:** | F |
| **Resa del colore:** | Ra/CRI >= 90 |
| **Zeichen:** | CE, MM, IP65, SK III |
| **EAN-Nr.:** | 4051268208666 |
| **Gewicht:** | 0,072 kg |

**Particolarità:**

- max. 60 W or 3 m per supply cable
- quick and easy installation due to double-sided adhesive tape
- with IP65, suitable for applications requiring higher ingress protection (general humidity, bathroom, kitchen, shops)
- halogen-free cables

Evo-Stick F2

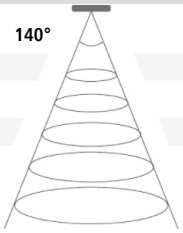


| | Ø | Meat R | xw | ww | nw |
|---|---|---|---|---|---|
| 0,5m | 670 | 1424 lx | 2236 lx | 2260 lx | 2360 lx |
| 1,0m | 1340 | 356 lx | 559 lx | 565 lx | 590 lx |
| 1,5m | 2010 | 158 lx | 248 lx | 251 lx | 262 lx |
| 2,0m | 2680 | 89 lx | 140 lx | 141 lx | 148 lx |
| 2,5m | 3350 | 57 lx | 89 lx | 90 lx | 94 lx |

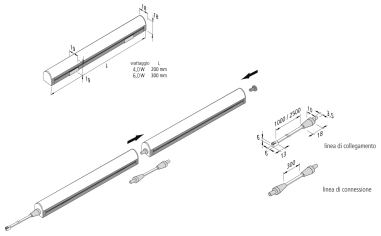

**N. articolo:**
20202930203

eventualmente disponibili in quantità limitata

## Versioni disponibili

Scegli tra le versioni seguenti. Quella attualmente selezionata è evidenziata a colori.

| N. articolo | Denominazione | Efficienza energetica | Colore della luce |
|---|---|---|---|
| 20202930104 | LED Evo-Stick F2 200mm 28 LED 4W xw | LED 129 lm/W; luminaire: 1900 lm/m (95 lm/W) | 2700 K bianco extra caldo |
| 20202930204 | LED Evo-Stick F2 300mm 42 LED 6W xw | LED 129 lm/W; luminaire: 1900 lm/m (95 lm/W) | 2700 K bianco extra caldo |
| 20202930102 | LED Evo-Stick F2 200mm 28 LED 4W ww | LED 129 lm/W; luminaire: 1900 lm/m (95 lm/W) | 3000 K bianco caldo |
| 20202930202 | LED Evo-Stick F2 300mm 42 LED 6W ww | LED 129 lm/W; luminaire: 1900 lm/m (95 lm/W) | 3000 K bianco caldo |
| 20202930103 | LED Evo-Stick F2 200mm 28 LED 4W nw | LED 129 lm/W; luminaire: 1900 lm/m (95 lm/W) | 4000 K bianco neutro |
| 20202930203 | LED Evo-Stick F2 300mm 42 LED 6W nw | LED 129 lm/W; luminaire: 1900 lm/m (95 lm/W) | 4000 K bianco neutro |
| 20202930105 | LED Evo-Stick F2 200mm 28 LED 4W Meat R | LED 80 lm/W; luminaire: 1200 lm/m (60 lm/W) | carne (colore di luce speciale) |
| 20202930205 | LED Evo-Stick F2 300mm 42 LED 6W Meat R | LED 80 lm/W; luminaire: 1200 lm/m (60 lm/W) | carne (colore di luce speciale) |
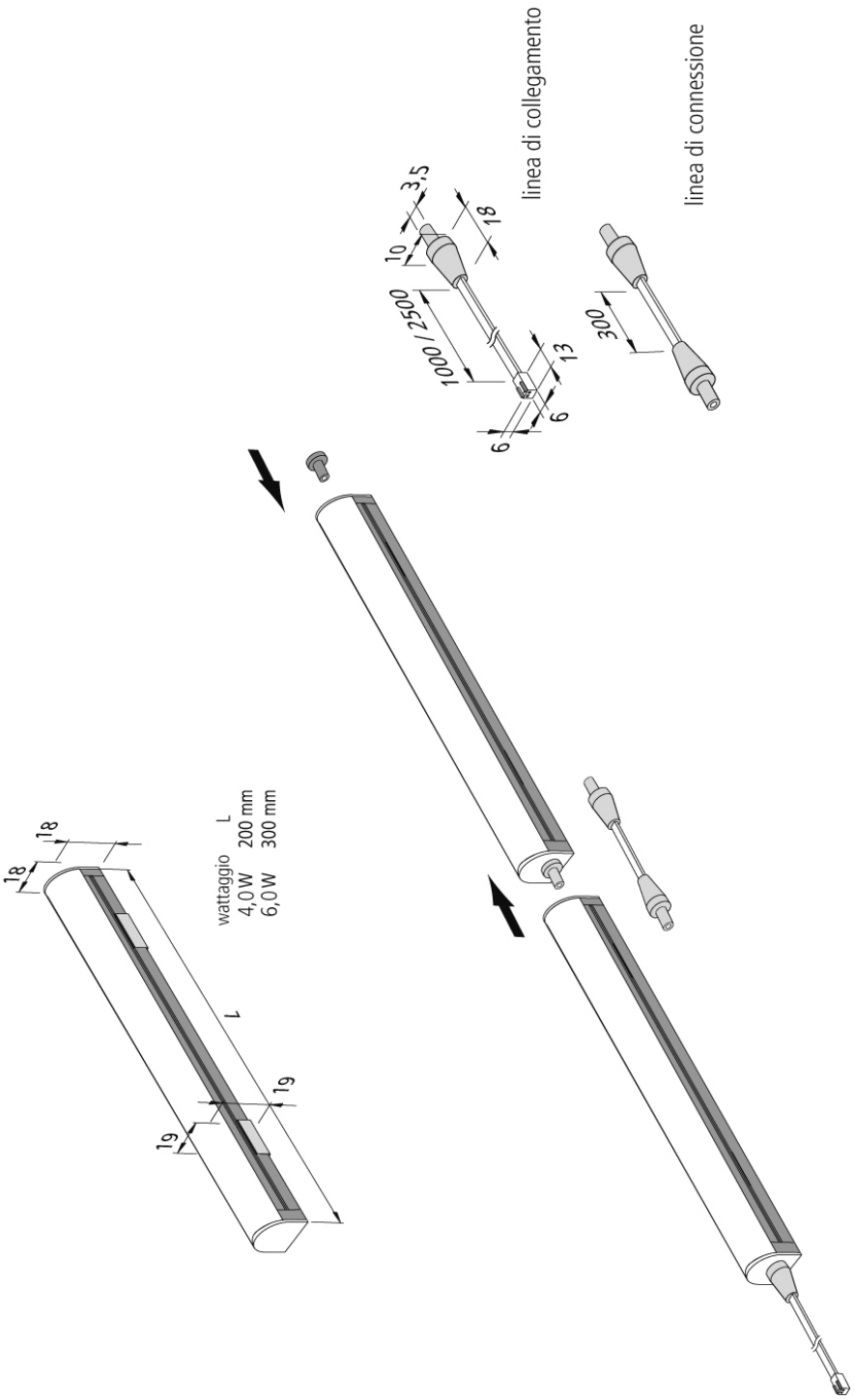
N. articolo: 20202930203